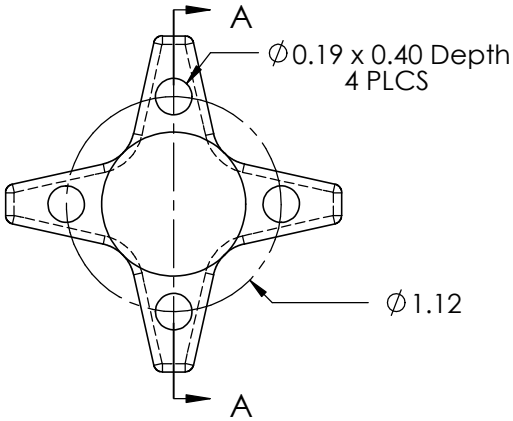

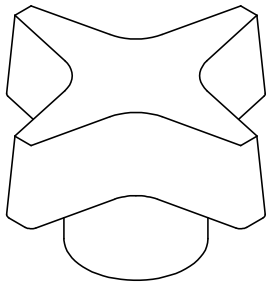

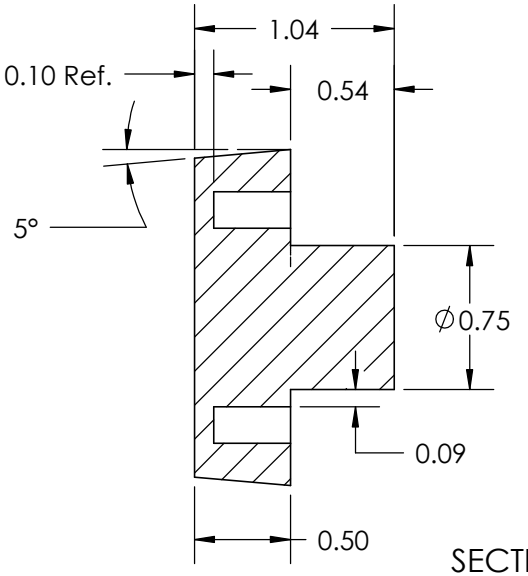

SECTION A-A

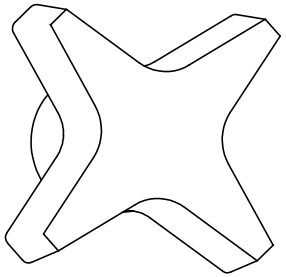

REV	BY	DATE	COMMENT
0	EAM	DRAFT	RELEASE DATE

PROPRIETARY AND CONFIDENTIAL

THE INFORMATION CONTAINED IN THIS DRAWING IS THE SOLE PROPERTY OF INNOVATIVE COMPONENTS. ANY REPRODUCTION IN PART OR AS A WHOLE WITHOUT THE WRITTEN PERMISSION OF INNOVATIVE COMPONENTS IS PROHIBITED.

DIMENSIONS ARE IN INCHES
TOLERANCES
FRACTIONAL ±
TWO PLACE DECIMAL ± 0.03
THREE PLACE DECIMAL ± 0.010
UNLESS OTHERWISE NOTED

KNOB MATERIAL

KNOB FINISH

INSERT PART NUMBER

DRAWN	EAM
APPROVED	KES
DATE	

COMMENTS

MIN. TORQUE N/A in.-lbs.

INSERT MATERIAL

INSERT FINISH

INNOVATIVE COMPONENTS

PART NAME

PART NUMBER
4P4 MASTER

DRAWING NUMBER
4P4

SCALE 1:1

SHEET 1 OF 1